⚠ WARNING

DO NOT EXCEED WORKING LOAD LIMIT.
USE ONLY G80 & G100 COMPATIBLE COMPONENTS FOR OVERHEAD LIFTING.

Tuff Lifting Equipments

Safe Lifters

Pundol Apartments, Shop No. 5 & 6, 160 M.G. Road,
Pune - 411001. (India) Tel +91 20 66013783 / 84 / 85 / 86
Fax +91 20 26350832 Email : safelifters@eth.net

Roundstock Clamp

The roundstock clamp picks up roundstock and pipe material up to 600 mm in diameter quickly and safely. With its optional protective lining, it can also pick up materials with sensitive surfaces. The lining also prevents slipping of pipe when tilted, which can occur if the roundstock grab is not positioned exactly at the center of gravity.

The protective lining only protects the material from sliding if the material is free of oil and grease.
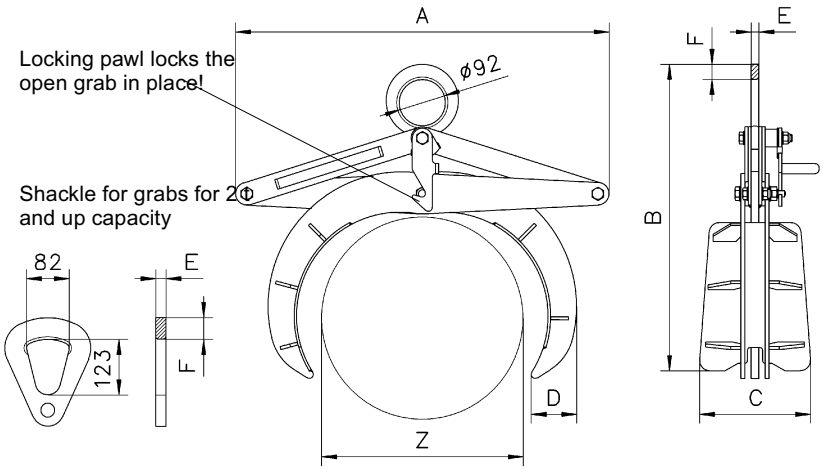
Model	Capacity t	Jaw mm	Weight kg	A mm	B min. mm	B max. mm	C mm	D mm	-NE mm	F
RSC 0,1/150	0,1	50 - 150	3,9	270	292	458	97	43	8	17
RSC 0,5/200	0,5	35 - 200	13,6	503	417	723	150	56	15	17
RSC 1,0/200	1,0	35 - 200	16,4	509	437	745	178	82	15	30
RSC 1,5/300	1,5	80 -300	29,0	720	520	937	204	84	20	25
RSC 3,0/300	3,0	80 - 300	50,7	740	582	960	220	125	20	30
RSC 4,0/600	4,0	200 - 600	204,0	1420	930	1815	318	205	30	35